PROJECT 21: Design and Analysis of 2:1 MUX by using Cadence Virtuoso

A Comprehensive Study of Analog Circuits

By: Priya Chaudhary, Astitva Johri and
Bhavya Solanki

Chapters:

List of Figures……..…… 3

1. Introduction …….. 4
2. Brief Description…… 5
3. Circuit Design……. 6-7
   3.1 Schematic Design……... 6
   3.2 Simulation Setup...…….. 6
   3.3 Transient Analysis…….. 6
4. Simulation Results…….. 8
5. Advantages and Disadvantages…….. 9
   5.1 Advantages……. 9
   5.2 Disadvantages……. 9
6. Conclusion…….. 10
7. Frequently Asked Questions (FAQs)…….. 11

LIST OF FIGURES

Figure 3.1 Symbol of 2:1 MUX……... 7

Figure 3.2 Circuit of 2:1 MUX……... 7

Figure 4.1 Simulation Results of 2:1 MUX……... 8

1. INTRODUCTION

A multiplexer (MUX) is a critical component in digital systems and is extensively used in communication, data processing, and computational applications. It operates as a data selector, allowing multiple input signals to be routed to a single output line based on a select line(s). The 2:1 multiplexer is one of the simplest types, enabling the selection of one of two input data lines. The ability to control and route signals with minimal hardware makes it a fundamental building block in digital circuit design.

The significance of the 2:1 MUX lies in its widespread application in circuits like arithmetic logic units (ALUs), data routing systems, and control units in processors. Understanding the design and functionality of a 2:1 multiplexer not only lays the foundation for more complex multiplexer designs but also aids in understanding broader concepts in digital electronics. This document provides an in-depth guide to designing, simulating, and analyzing a 2:1 multiplexer using Cadence Virtuoso, a leading electronic design automation (EDA) tool.

2. BRIEF DESCRIPTION

A 2-to-1 multiplexer (2:1 MUX) is a digital switching circuit that selects one of two input signals and forwards the chosen input to a single output based on a control signal. It has three key components: two data inputs (A and B), a select input (S), and a single output (Y). The function of the MUX is determined by the select signal SSS.

- When S=0, the output Y is equal to input A.
- When S=1, the output Y is equal to input B.

The behavior of a 2:1 MUX can be expressed by the following logic equation: $Y=(S \cdot B)+(\overline{S} \cdot A)$. This equation indicates that the output is the result of either input AAA or input BBB, depending on the state of the select signal SSS.

In terms of implementation, the 2:1 MUX is typically built using basic logic gates such as AND, OR, and NOT gates. The select signal SSS is used to control two AND gates—one for each input—and the results of these AND gates are combined with an OR gate to generate the final output.

2:1 multiplexers are commonly used in data routing, signal selection, and control applications. They allow efficient switching between two data sources, which is useful in systems like microprocessors, communication circuits, and memory addressing.

3. CIRCUIT DESIGN

A 2:1 multiplexer (MUX) selects one of two inputs, AAA or BBB, based on a control signal SSS. The output YYY is determined by the equation: $Y = (S \cdot B) + (\overline{S} \cdot A)$

1. NOT Gate: Inverts S to $\overline{S}$.
2. AND Gates:
   - First AND gate: A·$\overline{S}$.
   - Second AND gate: B·S
3. OR Gate: Combines both AND gate outputs to generate Y

3.1 Schematic Design

The schematic consists of:

- A **NOT gate** inverting S.
- Two **AND gates**: One for A·$\overline{S}$and the other for B·S.
- An **OR gate** combines the outputs of the two AND gates to give the output Y.

3.2 Simulation Setup

Simulation verifies the functionality of the MUX:

- Test Inputs: Vary A, B, and S.
- Expected Behavior: If S=0, output Y=\A; if S=1, output Y= B.
- Use simulation tools like Logisim or LTspice for graphical or circuit-based testing.

3.3 Transient Analysis

Transient analysis examines how the output changes over time:

- **Apply Step Inputs**: Vary S and observe Y.
- **Measure Delays**: Check for propagation delay from input change to output.
- Use tools like **LTspice** to visualize waveforms and measure delays.

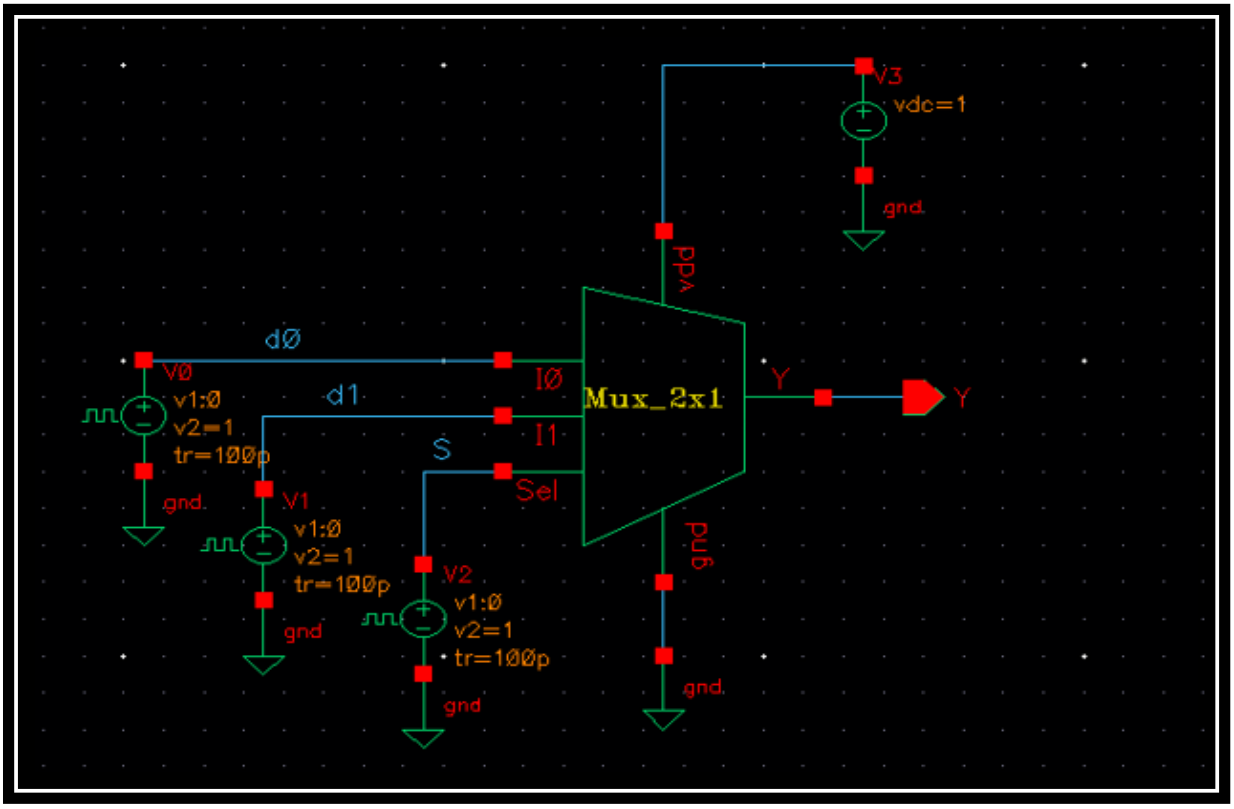

Figure 3.1 Symbol of 2:1 MUX

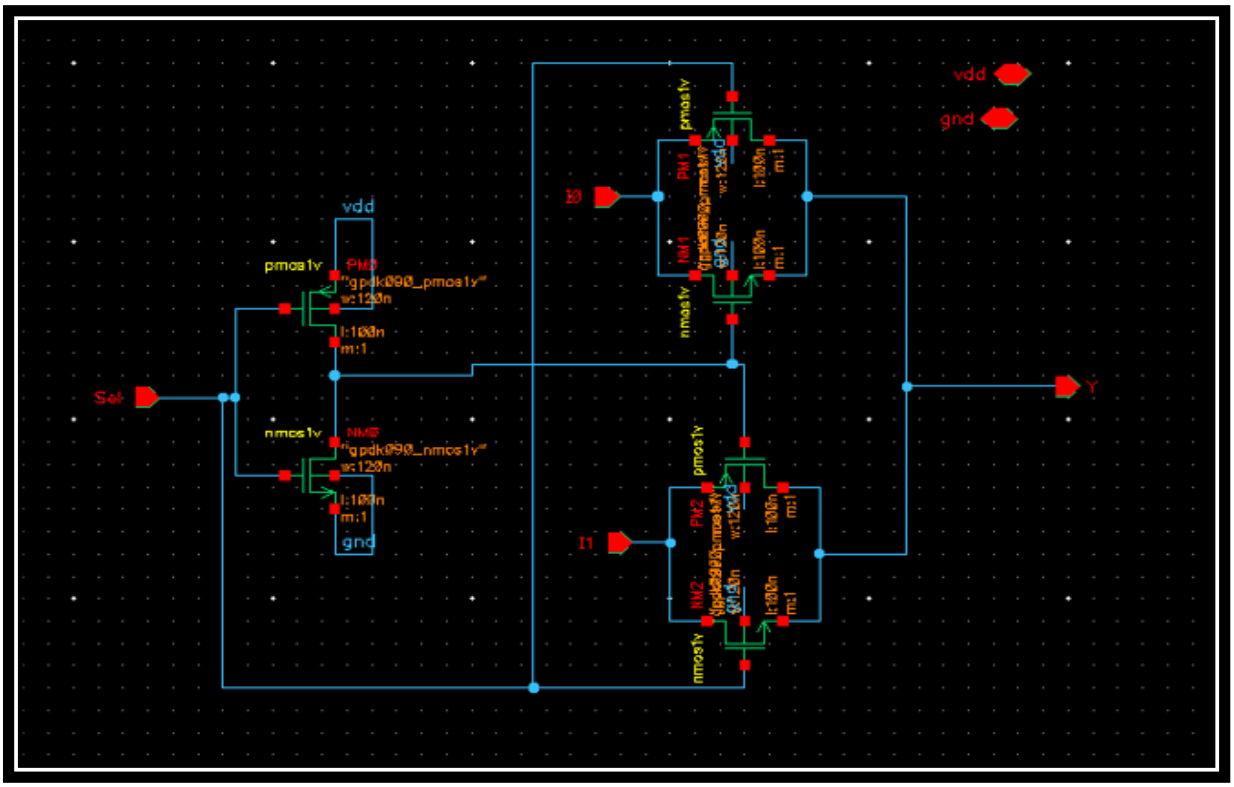

Figure 3.2 Circuit of 2:1 MUX

4. SIMULATION RESULTS

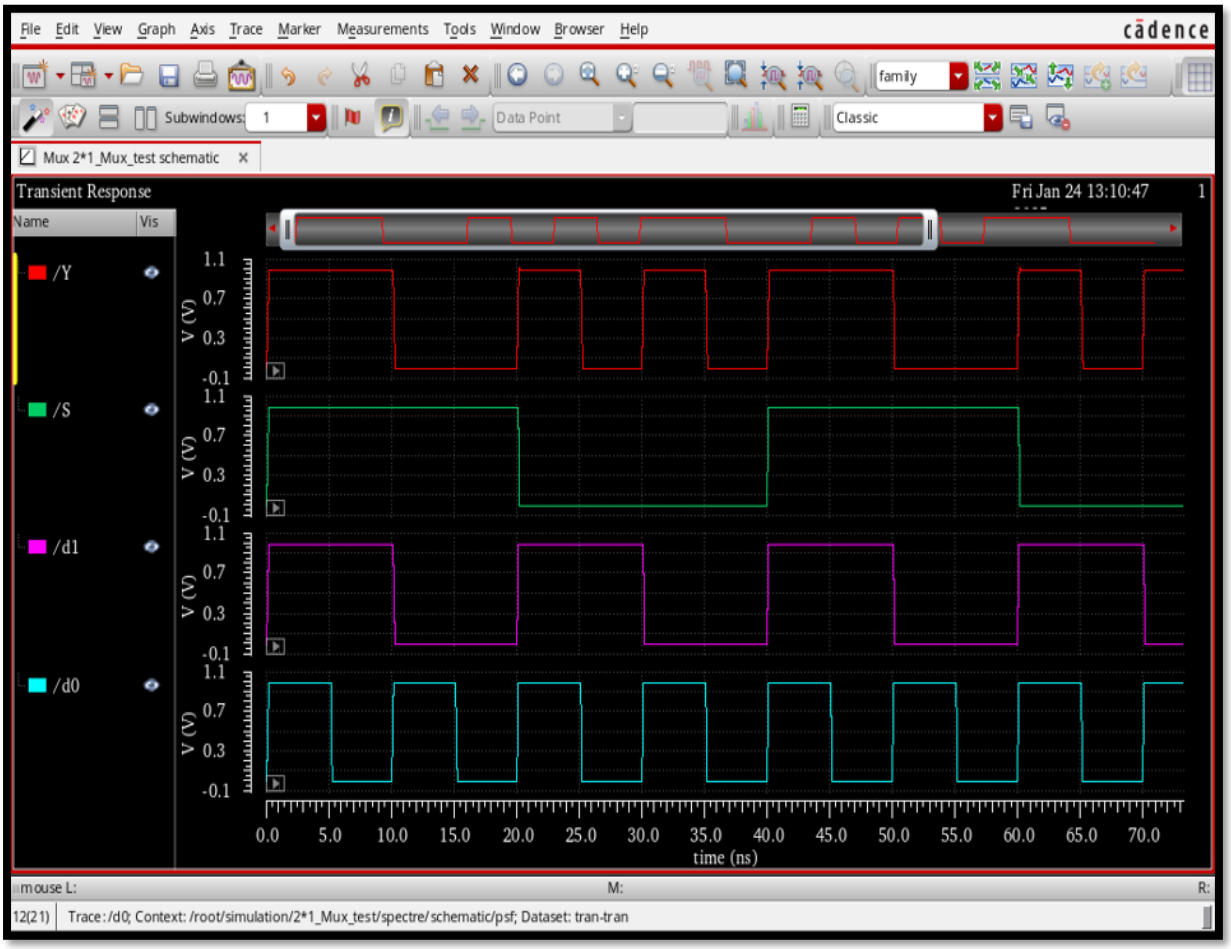

Figure 4.1: Simulation Results of 2:1 MUX

5. ADVANTAGES AND DISADVANTAGES

5.1 Advantages:-

1. **Compact Design**: The 2:1 MUX is simple and requires fewer transistors compared to other circuits.
2. **Versatility**: Can be used in larger circuits such as data selectors and ALUs.
3. **Ease of Implementation**: Simplified design process in tools like Cadence Virtuoso.

5.2 Disadvantages:-

1. **Power Consumption:** Leakage current in transistors may contribute to power consumption.
2. **Limited Functionality:** A 2:1 MUX handles only two inputs, requiring cascading for larger designs.

6. CONCLUSION

The design and analysis of a 2:1 multiplexer using Cadence Virtuoso demonstrate the fundamental principles of digital circuit design. Starting from the theoretical foundation, the process involves translating the logic equation into a transistor-level schematic, followed by simulation and transient analysis to validate functionality. Through the use of Cadence Virtuoso, designers can precisely model and optimize the circuit for performance and reliability.

The 2:1 multiplexer serves as an essential building block in digital systems, highlighting the interplay between theory and practical implementation. Its compact design, versatility, and ease of integration make it an invaluable tool in modern electronic systems. While the design of a 2:1 MUX is straightforward, the knowledge gained provides a strong basis for tackling more complex multiplexer designs and other combinational circuits.

7. FREQUENTLY ASKED QUESTIONS (FAQs)

Q1. What is the purpose of a multiplexer?

Answer: A multiplexer selects one input from multiple inputs and forwards it to the output based on control signals.

Q2. Why is transient analysis important in circuit design?

Answer: Transient analysis helps verify the dynamic behavior of the circuit over time, ensuring correct operation during input changes.

Q3. What are the key components used in the 2:1 MUX design?

Answer: The design uses PMOS and NMOS transistors, a NOT gate, and input/output connections.

Q4. Can this design be extended to create larger multiplexers?

Answer: Yes, larger multiplexers can be designed by cascading multiple 2:1 MUX circuits or using a hierarchical design approach.

Q5. How can power consumption be minimized in the MUX design?

Answer: Power consumption can be reduced by optimizing transistor sizes, minimizing leakage currents, and using low-power design techniques.